Selective Coordination

What Is Selective Coordination?

Today, more than ever, one of the most important parts of any installation - whether it is an office building, an industrial plant, a theater, a high-rise apartment or a hospital - is the electrical distribution system. Nothing will stop all activity, paralyze production, inconvenience and disconcert people and possibly cause a panic more effectively than a major power failure.

ISOLATION of a faulted circuit from the remainder of the installation is MANDATORY in today's modern electrical systems. Power BLACKOUTS CANNOT be tolerated.

It is not enough to select protective devices based solely on their ability to carry the system load current and interrupt the maximum fault current at their respective levels. A properly engineered system will allow ONLY the protective device nearest the fault to open, leaving the remainder of the system undisturbed and preserving continuity of service.

We may then define selective coordination as "THE ACT OF ISOLATING A FAULTED CIRCUIT FROM THE REMAINDER OF THE ELECTRICAL SYSTEM, THEREBY ELIMINATING UNNECESSARY POWER OUTAGES. THE FAULTED CIRCUIT IS ISOLATED BY THE SELECTIVE OPERATION OF ONLY THAT OVERCURRENT PROTECTIVE DEVICE CLOSEST TO THE OVERCURRENT CONDITION."

The two one line diagrams in the figure below demonstrate the concept of selective coordination.

The system represented by the one line diagram to the left is a system without selective coordination. A fault on the load side of one overcurrent protective device unnecessarily opens other upstream overcurrent protective device(s). The result is unnecessary power loss to loads that should not be affected by the fault.

The system represented by the one line diagram to the right is a system with selective coordination. For the full range of overload or fault currents possible, only the nearest upstream overcurrent protective device opens. All the other upstream overcurrent protective devices do not open. Therefore, only the circuit with the fault is removed and the remainder of the power system is unaffected. The other loads in the system continue uninterrupted.

Selective coordination can be a critical aspect for electrical systems. Quite often in the design or equipment selection phase, it is ignored or overlooked. And when it is evaluated many people misinterpret the information thinking that selective coordination has been achieved when in fact, it has not. The following sections explain how to evaluate systems as to whether the overcurrent protective devices provide selective coordination for the full range of overcurrents.

Selective Coordination: Avoids Blackouts

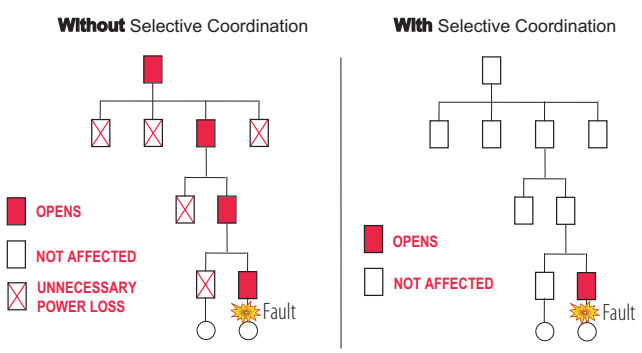

Popular Methods of Performing a Selective Coordination Study

Currently three methods are most often used to perform a coordination study:

1. Overlays of time-current curves, which utilize a light table and manufacturers' published data, then hand plot on log-log paper.
2. Computer programs that utilize a PC and allow the designer to select time-current curves published by manufacturers and transfer to a plotter or printer, following proper selections.
3. For fuse systems, 600V or less, merely use the published selectivity ratios.

This text will apply to all three methods.

Overloads and Low Level Fault Currents

In the sections ahead, information is presented as an aid to understanding time-current characteristic curves of fuses and circuit breakers. There are simple methods that will be presented to analyze coordination for most systems 600V or less.

It should be noted that the study of time-current curves indicates performance during overload and low level fault conditions. The performance of overcurrent devices that operate under medium to high level fault conditions are not reflected on standard curves. Other engineering methods may be necessary.

Coordination Analysis

The next several pages cover coordination from various perspectives. The major areas include:

Fuse curves
Fuse selective coordination analysis
Circuit breaker curves
Circuit breaker coordination analysis
Ground Fault Protection–coordination

The section on ground fault protection is included immediately after the fuse and circuit breaker coordination sections because GFP systems can cause coordination issues. The ground fault protection section discusses GFP requirements and then discusses coordination considerations.

Fuse Selective Coordination

Fuse Curves

The figure to the right illustrates the time-current characteristic curves for two sizes of time-delay, dual-element fuses in series, as depicted in the one-line diagram. The horizontal axis of the graph represents the RMS symmetrical current in amperes. The vertical axis represents the time, in seconds.

For example: Assume an available fault current level of 1000 amperes RMS symmetrical on the load side of the 100 ampere fuse. To determine the time it would take this fault current to open the two fuses, first find 1000 amperes on the horizontal axis (Point A), follow the dotted line vertically to the intersection of the total clear curve of the 100 ampere time-delay dual-element fuse (Point B) and the minimum melt curve of the 400 ampere time-delay dual-element fuse (Point C). Then, horizontally from both intersection points, follow the dotted lines to Points D and E. At 1.75 seconds, Point D represents the maximum time the 100 ampere time-delay dual-element fuse will take to open the 1000 ampere fault. At 90 seconds, Point E represents the minimum time at which the 400 ampere time-delay dual-element fuse could open this available fault current. Thus, coordination operation is assured at this current level.

The two fuse curves can be examined by the same procedure at various current levels along the horizontal axis (for example, see Points F and G at the 2000 ampere fault level). It can be determined that the two fuses are coordinated, for the overcurrents corresponding to the fuse curves on the graph. The 100 ampere time-delay dual-element fuse will open before the 400 ampere time-delay dual-element fuse can melt. However, it is neccessary to assess coordination for the full range of overloads and fault currents that are possible.

For analyzing fuse selective coordination for higher level fault currents see the next page, “Medium to High Level Fault Currents–Fuse Coordination”. When using the published Fuse Selectivity Ratios, drawing time current curves is not necessary.

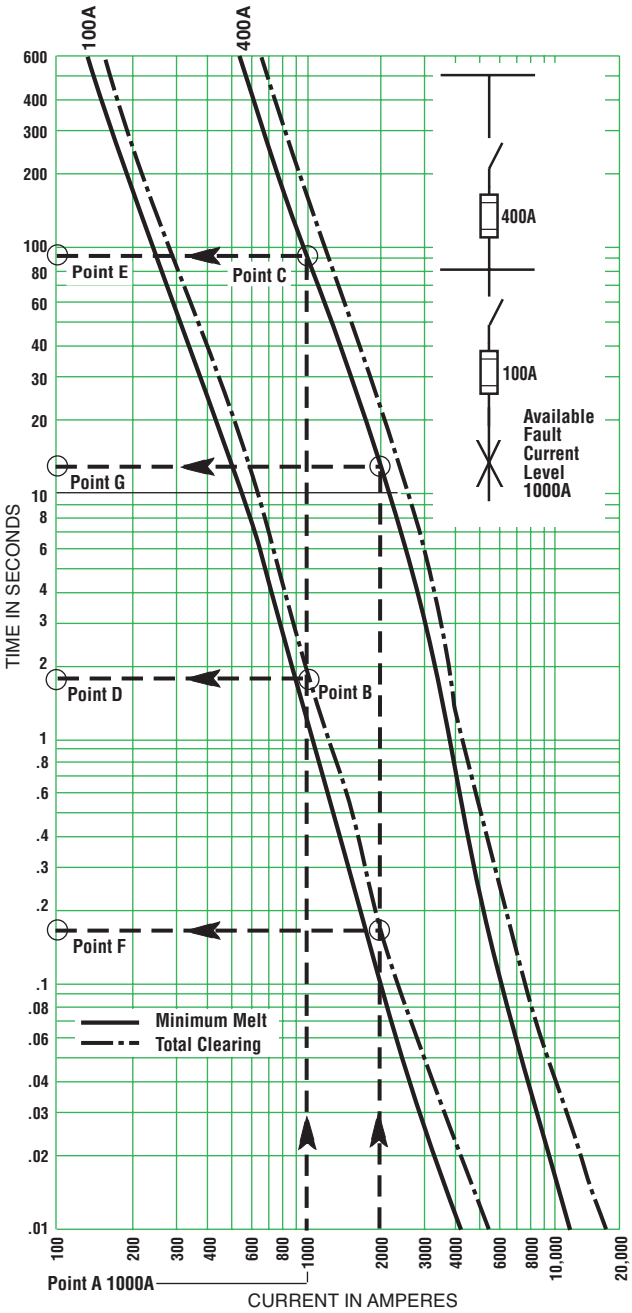

Fuse Selective Coordination

Medium to High Level Fault Currents–Fuse Coordination

The illustration on the next page shows the principles of selective coordination when fuses are properly applied. The available short-circuit current will reach a peak value of I_p during the first half cycle unless a protective device limits the peak fault current to a value less than I_p. A current-limiting fuse will reduce the available peak current to less than I_p, namely I'_p, and will clear the fault in approximately one-half cycle or less. Note that t_c is the total clearing time of the fuse, t_m the melting time and t_a the arcing time of the fuse. Where high values of fault current are available, the sub-cycle region becomes the most critical region for selective operation of current-limiting fuses.

The area under the current curves is indicative of the energy let-through. If no protective device were present, or if mechanical type overcurrent devices with opening times of one-half cycle or longer were present, the full available short-circuit energy would be delivered to the system. The amount of energy delivered is directly proportionate to the square of the current. So we can see how important it is to have fuses which can limit the current being delivered to the system to a value less than the available current. The amount of energy being produced in the circuit while the fuse is clearing is called the total clearing energy and is equal to the melting energy plus the arcing energy.

Selectivity between two fuses operating under short-circuit conditions exists when the total clearing energy of the load side fuse is less than the melting energy of the line side fuse.

An engineering tool has been developed to aid in the proper selection of Bussmann® fuses for selective coordination. This Selectivity Ratio Guide (SRG) is shown below.

*** Selectivity Ratio Guide (Line-Side to Load-Side) for Blackout Prevention**

Circuit		Load-Side Fuse											
Current Rating				601-6000A	601-4000A	0-600A			601-6000A	0-600A	0-1200A	0-600A	0-60A
Type				Time-Delay	Time-Delay	Dual-Element Time-Delay			Fast-Acting	Fast-Acting			Time-Delay
		Trade Name		LOW-PEAK® YELLOW	LIMITRON	LOW-PEAK® YELLOW		FUSETRON®	LIMITRON	LIMITRON	T-TRON®	LIMITRON	SC
		Class		(L)	(L)	(RK1)	(J)	(RK5)	(L)	(RK1)	(T)	(J)	(G)
		Buss® Symbol		**KRP-C_SP**	**KLU**	**LPN-RK_SP LPS-RK_SP**	**LPJ-SP**	**FRN-R FRS-R**	**KTU**	**KTN-R KTS-R**	**JJN JJS**	**JKS**	**SC**
Line-Side Fuse													
601 to 6000A	Time-Delay	LOW-PEAK® YELLOW (L)	**KRP-C_SP**	2:1	2.5:1	2:1	2:1	4:1	2:1	2:1	2:1	2:1	N/A
601 to 4000A	Time-Delay	LIMITRON (L)	**KLU**	2:1	2:1	2:1	2:1	4:1	2:1	2:1	2:1	2:1	N/A
0 to 600A	Dual-Element	LOW-PEAK® YELLOW (RK1)	**LPN-RK_SP**	–	–	2:1	2:1	8:1	–	3:1	3:1	3:1	4:1
		(J)	**LPS-RK_SP LPJ-SP**	–	–	2:1	2:1	8:1	–	3:1	3:1	3:1	4:1
		FUSETRON® (RK5)	**FRN-R FRS-R**	–	–	1.5:1	1.5:1	2:1	–	1.5:1	1.5:1	1.5:1	1.5:1
601 to 6000A	Fast-Acting	LIMITRON (L)	**KTU**	2:1	2.5:1	2:1	2:1	6:1	2:1	2:1	2:1	2:1	N/A
0 to 600A		LIMITRON (RK1)	**KTN-R KTS-R**	–	–	3:1	3:1	8:1	–	3:1	3:1	3:1	4:1
0 to 1200A		T-TRON® (T)	**JJN JJS**	–	–	3:1	3:1	8:1	–	3:1	3:1	3:1	4:1
0 to 600A		LIMITRON (J)	**JKS**	–	–	2:1	2:1	8:1	–	3:1	3:1	3:1	4:1
0 to 60A	Time-Delay	SC (G)	**SC**	–	–	3:1	3:1	4:1	–	2:1	2:1	2:1	2:1

* **Note:** At some values of fault current, specified ratios may be lowered to permit closer fuse sizing. Plot fuse curves or consult with Bussmann®.
General Notes: Ratios given in this Table apply only to Buss® fuses. When fuses are within the same case size, consult Bussmann®.

Fuse Selective Coordination

For the next example, the Selectivity Ratio Guide suggests that the minimum ratio between line side and load side fuse should be at least 2:1. The one-line shows LOW-PEAK® fuses KRP-C-1000SP feeding a LPS-RK-200SP. The ratio of ampere ratings is 5:1 (1000:200) which indicates coordination between these fuses. Continuing further into the system the LPS-RK-200SP feeds a LPJ-60SP. This ratio of ampere ratings is 3.33:1 (200:60), which also indicates a selectively coordinated system.

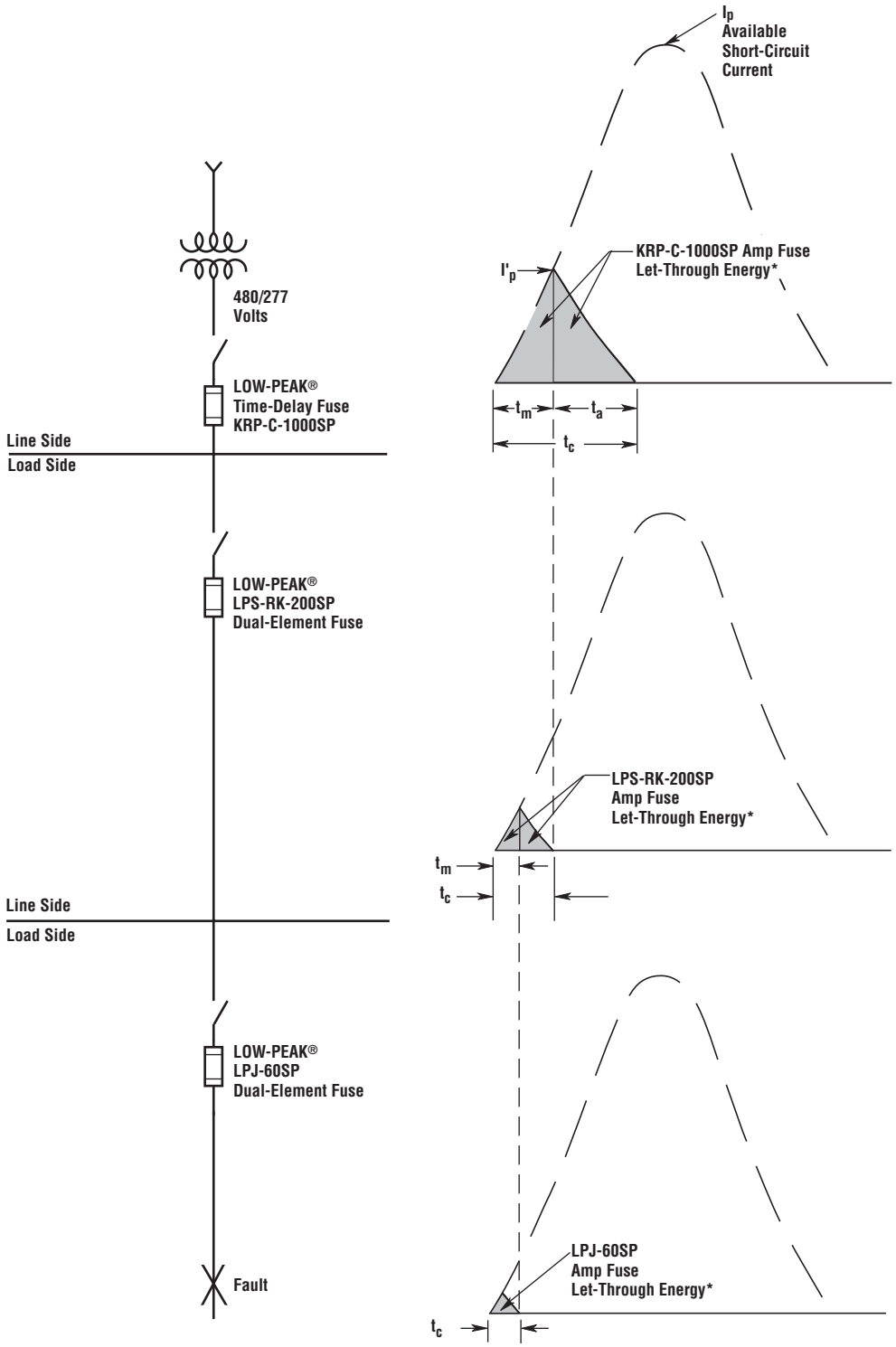

Requirements for selectivity—Total clearing energy of load side fuse is less than melting energy of line side fuse.

*Area under the curves is not actual energy but is indicative of let-through energy. Actual let-through energy is I^2t.

Example — Fuse Selective Coordination

Review the one-line diagram of the fusible system. All the fuses are LOW-PEAK® Fuses. The Selectivity Ratio Guide provides the minimum ampere ratio that must be observed between a line-side fuse and a load-side fuse in order to achieve selective coordination between the two fuses. If the entire electrical system maintains at least these minimum fuse ampere rating ratios throughout the system, the entire electrical system will be selectively coordinated. Notice, time current curves do not even need to be drawn.

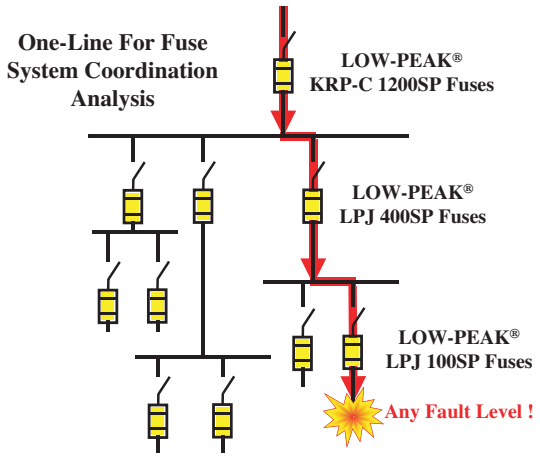

Check the LPJ 100SP fuse coordination with the LPJ-400SP fuse. The ampere rating ratio of these fuses is 400:100 which equals 4:1 ratio. Checking the Selectivity Ratio Guide, line-side LPJ (vertical left column) to load-side LPJ (horizontal), yields a ratio of 2:1. This indicates selective coordination for these two sets of fuses. This means for any overcurrent on the load-side of the LPJ-100SP fuse, only the LPJ-100SP fuses open. The LPJ-400SP fuses remain in operation as well as the remainder of the system.

Check the LPJ-400SP fuse coordination with the KRP-C-1200SP fuse. Use the same steps as in the previous paragraph. The ampere rating ratio of the two fuses in the system is 1200:400, which yields an ampere rating ratio of 3:1. The Selectivity Ratio Guide shows that the ampere rating ratio must be maintained at 2:1 or more to achieve selective coordination. Since the fuses used have a 3:1 ratio, and all that is needed is to maintain a 2:1 ratio, these two fuses are selectively coordinated. See the following diagram.

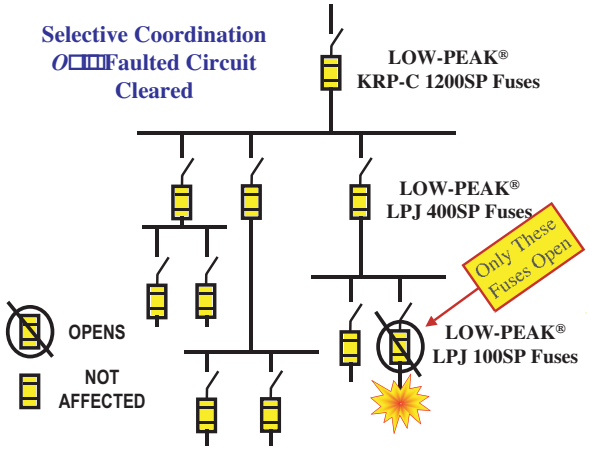

Summary — Fuse Coordination

Selective coordination is an important system criteria that is often overlooked or improperly analyzed. With modern current-limiting fuses, all that the design engineer, contractor or user needs to do is adhere to these ratios. It is not necessary to draw the time current curves. Just maintain at least the minimum ampere rating ratios provided in the Bussmann® Selectivity Ratio Guide and the system will be selectively coordinated. This simple method is easy and quick.

Circuit Breaker Curves

The following curve illustrates a typical thermal magnetic molded case circuit breaker curve with an overload region and an instantaneous trip region (two instantaneous trip settings are shown). Circuit breaker time-current characteristic curves are read similar to fuse curves. The horizontal axis represents the current, and the vertical axis represents the time at which the breaker interrupts the circuit.

When using molded case circuit breakers of this type, there are four basic curve considerations that must be understood. These are:

1. Overload Region
2. Instantaneous Region
3. Unlatching Time
4. Interrupting Rating

1. Overload Region — The opening of a molded case circuit breaker in the overload region is generally accomplished by a thermal element, while a magnetic coil is generally used on power breakers. Electronic sensing breakers will utilize CT's. As can be seen, the overload region has a wide tolerance band, which means the breaker should open within that area for a particular overload current.

2. Instantaneous Region — The instantaneous trip setting indicates the multiple of the full load rating at which the circuit breaker will open as quickly as possible. The instantaneous region is represented in the following curve and is shown to be adjustable from 5× to 10× the breaker rating. When the breaker coil senses an overcurrent in the instantaneous region, it releases the latch which holds the contacts closed.

The unlatching time is represented by the curve labeled "average unlatching time for instantaneous tripping". After unlatching, the overcurrent is not halted until the breaker contacts are mechanically separated and the arc is extinguished. Consequently, the final overcurrent termination can vary over a wide range of time, as is indicated by the wide band between the unlatching time curve and the maximum interrupting time curve.

The instantaneous trip setting for larger molded case and power breakers can usually be adjusted by an external dial. Two instantaneous trip settings for a 400 amp breaker are shown. The instantaneous trip region, drawn with the solid line, represents an I.T. = 5×, or five times 400 amperes = 2000 amperes. At this setting, the circuit breaker will trip instantaneously on currents of approximately 2000 amperes or more. The ± 25% band represents the area in which it is uncertain whether the overload trip or the instantaneous trip will operate to clear the overcurrent.

The dashed portion represents the same 400 ampere breaker with an I.T. = 10×, or 10 times 400 amperes = 4000 amperes. At this setting the overload trip will operate up to approximately 4000 amperes (±10%). Overcurrents greater than 4000 amperes (±10%) would be cleared by the instantaneous trip.

3. Unlatching Times — As explained above, the unlatching time indicates the point at which the breaker senses an overcurrent in the instantaneous region and releases the latch holding the contacts. However, the fault current continues to flow through the breaker and the circuit to the point of fault until the contacts can physically separate and extinguish the arc. Once the unlatching mechanism has sensed an overcurrent and unlatched, the circuit breaker will open. The final interruption of the current represented on the breaker curve in the instantaneous region occurs after unlatching, but within the maximum interruption time.

The relatively long time between unlatching and the actual interruption of the overcurrent in the instantaneous region is the primary reason that molded case breakers are very difficult to coordinate. This is an inherent problem since the breaking of current is accomplished by mechanical means.

4. Interrupting Rating — The interrupting rating of a circuit breaker is a critical factor concerning protection and safety. The interrupting rating of a circuit breaker is the maximum fault current the breaker has been tested to interrupt in accordance with testing laboratory standards. Fault currents in excess of the interrupting rating can result in destruction of the breaker and equipment and possible injury to personnel. In other words, when the fault level exceeds the circuit breaker interrupting rating, the circuit breaker is no longer a protective device.

In the example graph below, the interrupting rating at 480 volts is 30,000 amperes. The interrupting ratings on circuit breakers vary according to breaker type and voltage level.

When drawing circuit breaker time-current curves, determine the proper interrupting rating from the manufacturer's literature and represent this interrupting rating on the drawing by a vertical line at the right end of the curve.

Typical Circuit Breaker Time-Current Characteristic Curve

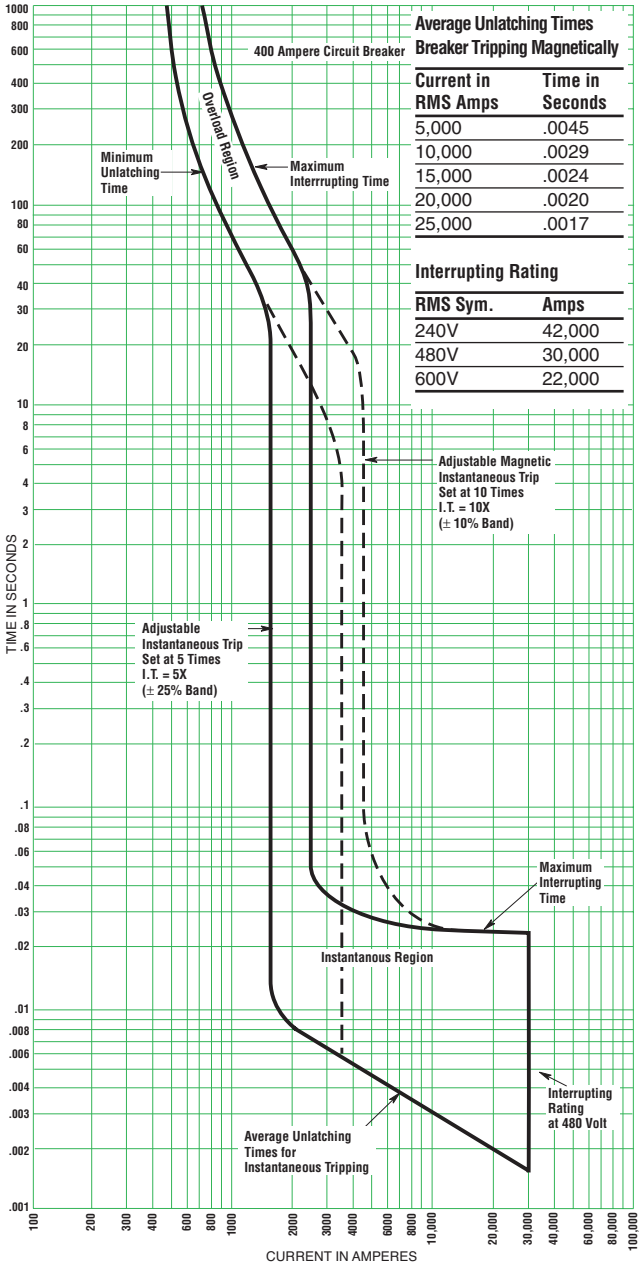

Average Unlatching Times Breaker Tripping Magnetically

Current in RMS Amps	Time in Seconds
5,000	.0045
10,000	.0029
15,000	.0024
20,000	.0020
25,000	.0017

Interrupting Rating

RMS Sym.	Amps
240V	42,000
480V	30,000
600V	22,000

Medium to High Level Fault Currents–Circuit Breakers

The following curve illustrates a 400 ampere circuit breaker ahead of a 90 ampere breaker. Any fault above 1500 amperes on the load side of the 90 ampere breaker will open both breakers. The 90 ampere breaker will generally unlatch before the 400 ampere breaker. However, before the 90 ampere breaker can separate its contacts and clear the fault current, the 400 ampere breaker has unlatched and also will open.

Assume a 4000 ampere short-circuit exists on the load side of the 90 ampere circuit breaker. The sequence of events would be as follows:

1. The 90 ampere breaker will unlatch (Point A) and free the breaker mechanism to start the actual opening process.

2. The 400 ampere breaker will unlatch (Point B) and it, too, would begin the opening process. Once a breaker unlatches, it will open. At the unlatching point, the process is irreversible.

3. At Point C, the 90 ampere breaker will have completely interrupted the fault current.

4. At Point D, the 400 ampere breaker also will have completely opened the circuit.

Consequently, this is a **non-selective** system, causing a complete blackout to the other loads protected by the 400 ampere breaker.

As printed by one circuit breaker manufacturer, "One should not overlook the fact that when a high fault current occurs on a circuit having several circuit breakers in series, the instantaneous trip on all breakers may operate. Therefore, in cases where several breakers are in series, the larger upstream breaker may start to unlatch before the smaller downstream breaker has cleared the fault. This means that for faults in this range, a main breaker may open when it would be desirable for only the feeder breaker to open."

Typically circuit breaker manufacturers do not publish the unlatching times or unlatching curves for their products.

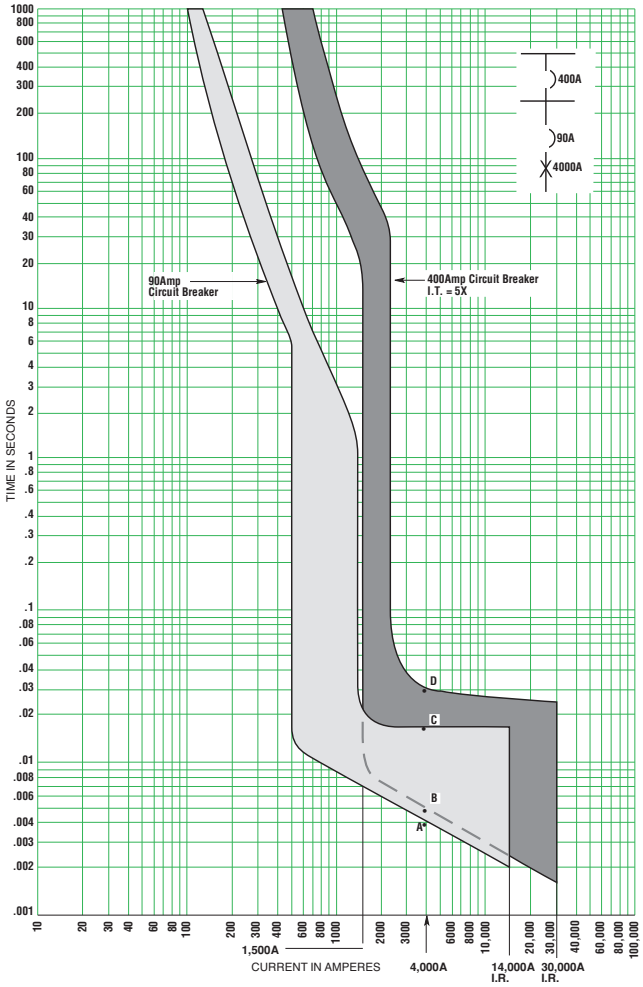

Simple Method To Check Circuit Breaker Coordination

The previous discussion and curve illustrated two molded case circuit breakers (90A and 400A) with the unlatching characteristics for both shown on one curve. This illustrated that two circuit breakers with instantaneous trips can not be selectively coordinated for fault currents above a certain level. That level is the fault current at which the upstream circuit breaker operates in its instantaneous trip region. When a fault above that level occurs, the lower circuit breaker (90A in this case) unlatches. However, before it clears the circuit, the upstream circuit breaker(s) (400A in this case) also unlatches. Once a circuit breaker unlatches, it will open, thereby disconnecting the circuit from the power source. In the case shown, the curves show the 400A circuit breaker needlessly opens for a fault on the load side of the 90A circuit breaker. For any fault current greater than where the two circuit breaker curves intersect (in this case 1,500 amperes) the upstream circuit breaker does not coordinate with the down stream circuit breaker.

However, in most cases, manufacturers do not publish unlatching times or unlatching curves for their circuit breakers. So then, how can coordination of circuit breakers be assessed when all the circuit breakers used in a system have instantaneous trip settings? There is a very simple method that does not even require drawing the circuit breaker time current curves. The following paragraphs present this method.

(1) This simple method will be shown **with** the time current curves (but without the unlatching time curves included).
(2) However, normally it is not even necessary to draw the time current curves in order to evaluate coordination of circuit breakers having instantaneous trip units. So another section provides this simplified method **without** needing a time current curve.

Below is the one line diagram that will be used for learning these simple methods. Review the one-line diagram below that has three molded case circuit breakers in series: from the main 1200A to the 100A branch circuit with the 400A feeder in between. The other circuit breakers on the one-line diagram supply other circuits and loads. The fault current path from the power source is depicted by the red arrows/lines superseded on the one-line diagram.

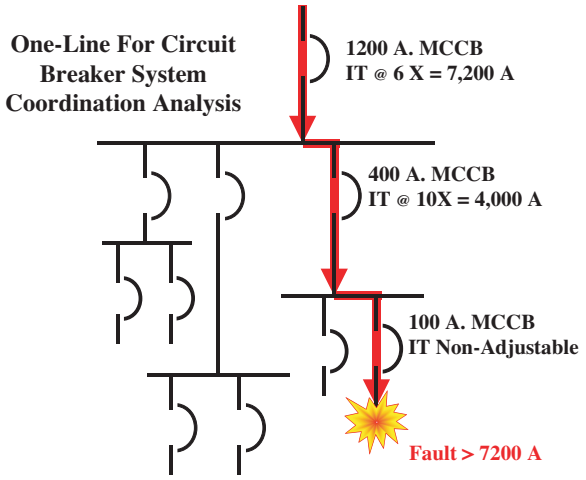

Circuit Breaker Coordination — Simplified Method *With* Time Current Curve

With the simplified method, there is no need to have the unlatching times or draw the unlatching curves. The following curve illustrates the time current characteristics for the 1200A circuit breaker, the 400A circuit breaker and 100A circuit breaker. The instantaneous trip settings for each of these three molded case circuit breakers are provided on the one-line diagram. The 100A circuit breaker has a non-adjustable instantaneous trip setting and the curve is as depicted. The 400A circuit breaker has an instantaneous trip set at 10 times its ampere rating (10X) which is 10 times 400A or **4,000 amperes**. The 1200A circuit breaker has an instantaneous trip set at 6 times its ampere rating (6X) which is 6 times 1200A rating or **7,200 amperes**. Remember from a previous section "2. Instantaneous Region" that there is a tolerance associated with the instantaneous trip region for adjustable instantaneous trip settings; the curve shown for the 400A and 1200A circuit breakers are drawn with the tolerances included.

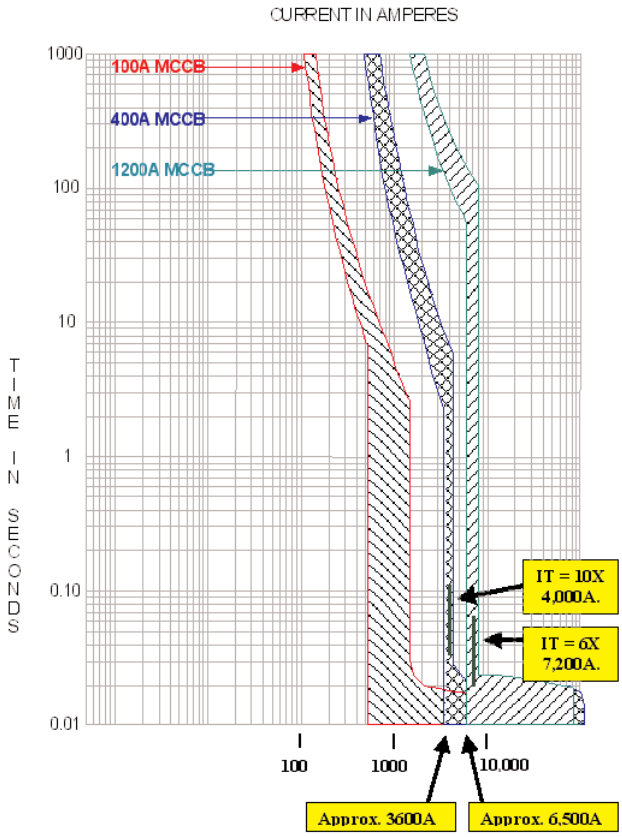

When the curves of two circuit breakers cross over in their instantaneous trip region, then the drawing indicates that the two circuit breakers do not coordinate for fault currents greater than this cross over point.

For instance, interpreting the coordination curves for the 100A circuit breaker and the 400A circuit breaker: their curves intersect in the instantaneous region starting at approximately 3,600 amperes. That means for a fault current greater than 3,600 amperes on the load side of the 100A circuit breaker, the 400A circuit breaker will open as well as the 100A circuit breaker. This demonstrates a lack of coordination.

This curve also shows that for any fault greater than approximately 6,500 amperes on the load side of the 100A circuit breaker, the 400A and 1200A circuit breakers will open as well as the 100A circuit breaker. The reason: for a fault of greater than 6,500 amperes, all three of these circuit breakers are in their instantaneous trip region. Both the 400A and 1200A circuit breakers can unlatch before the 100A circuit breaker clears the fault current. If this is not understood, re-read the previous section "Circuit Breaker Coordination - Medium to High Level Fault Currents".

How does this affect the electrical system? Look at the one-line diagram below. For any fault current greater than approximately 6,500 amperes on the load side of the 100A circuit breaker, the 1200A and 400A circuit breakers open as well as the 100A circuit breaker. The yellow shading indicates that all three circuit breakers opened - 100A branch circuit, 400A feeder and the 1200A main. In addition, all the loads fed by the other circuit breakers, denoted by the hash shading, are blacked out unnecessarily. This is due to the lack of coordination between the 100A, 400A and 1200A circuit breakers.

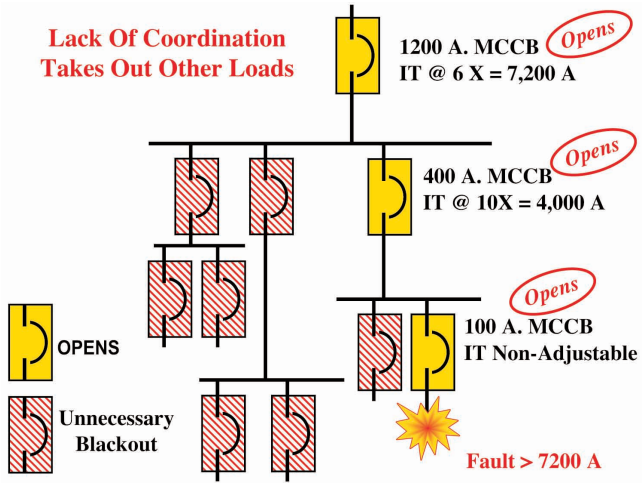

Circuit Breaker Coordination — Simplified Method *Without* Time Current Curve

It is not even necessary to draw the curves to assess circuit breaker coordination. All that is necessary is to use some simple multiplication. Multiply the instantaneous trip setting times the circuit breaker ampere rating (the instantaneous trip setting is usually adjustable but can vary depending upon frame size and circuit breaker type - some have adjustable settings of 4 to 10 times the ampere rating - check specifications of specific circuit breaker). The product of these two is the approximate point at which a circuit breaker enters its instantaneous trip region. (As explained in a previous section "2. Instantaneous Region", there is a tolerance associated with where the instantaneous trip initially picks up. A vertical band depicts the instantaneous trip pickup tolerance. For this easy method, we will ignore the tolerance band; therefore the results differ somewhat from the time current curve example just given.)

For instance, the 400A circuit breaker in this example has its instantaneous trip (IT) set at 10 times its ampere rating (10X). Therefore for fault currents above 10 x 400A or 4000 amperes, the 400A circuit breaker will unlatch in its instantaneous trip region, thereby opening.

The same could be determined for the 1200A circuit breaker, which has its instantaneous trip set at 6X its ampere rating. Therefore, for fault currents above 7200 amps, the 1200A circuit breaker unlatches in its instantaneous trip region, thereby opening.

The coordination analysis of the circuit breakers merely requires knowing what the numbers mean:

1. Any fault on the loadside of the 100A circuit breaker greater than 4,000 amperes will open the 400A circuit breaker as well as the 100A circuit breaker. Reason: the 400A circuit breaker with an instantaneous trip set at 10 times opens instantaneously for any fault current greater than 4,000A.
2. Any fault on the loadside of the 100A circuit breaker greater than 7,200 amperes will open the 1200A circuit breaker as well as the 100A and 400A circuit breakers. Reason: the 1200A circuit breaker with an instantaneous trip set at 6 times opens instantaneously for any fault current greater than 7,200A.
3. Any fault on the loadside of the 400A circuit breaker greater than 7,200 amperes will open the 1200A circuit breaker as well as the 400A circuit breaker. Reason: the 1200A circuit breaker with an instantaneous trip set at 6 times opens instantaneously for any fault current greater than 7,200A.

So it becomes apparent, to evaluate coordination of circuit breakers with instantaneous trips, the time current curves do not have to be drawn. All that is necessary is to use simple multiplication of the instantaneous trip settings times the circuit breaker ampere ratings,and evaluate this in conjunction with the available fault current.

Note: Circuit breakers that provide the use of a short time delay do not always assure coordination. The reason is that molded case circuit breakers and insulated case circuit breakers that have a short-time delay will also have an instantaneous trip setting that overrides the short-time delay at some fault level. Molded case circuit breakers with short time delay settings will have an instantaneous trip that overrides the short time delay, typically at a maximum of 10 times the ampere rating. These instantaneous overrides are necessary to protect the circuit breakers for higher faults. The same simple procedure for evaluating circuit breakers with instantaneous trips can be used for this type circuit breaker, also. Merely read the manufacturer's literature to determine this instantaneous trip override setting. However, be certain to establish if the instantaneous trip pickup is given in symmetrical amperes or asymmetrical amperes. Some manufacturers specify the instantaneous override in asymmetrical amperes which for practical evaluation purposes moves the instantaneous trip pickup setting to the left (picks up at lower symmetrical fault currents than perceived).

See the next two pages for a brief discussion and curves of short-time delay settings and instantaneous overrides.

Short-Time-Delay And Instantaneous Override — Some circuit breakers are equipped with short-time delay settings for the sole purpose of improving system coordination. Review the three curves on this page and the next page.

Circuit breaker short-time-delay (STD) mechanisms allow an intentional delay to be installed on low voltage power circuit breakers. Short-time-delays allow the fault current to flow for several cycles, which subjects the electrical equipment to unnecessarily high mechanical and thermal stress. Most equipment ratings, such as short-circuit ratings for bus duct and switchboard bus, do not apply when short-time-delay settings are employed. The use of short-time-delay settings on circuit breakers requires the system equipment to be reinforced to withstand the available fault current for the duration of the short-time-delay. Ignoring equipment ratings in relation to the protective device opening time and let-through characteristics can be disastrous. Shown to the right is a time-current curve for a low voltage power circuit breaker with short-time delay set at 21 cycles.

An insulated case circuit breaker (ICCB) may also be equipped with short-time-delay. However, ICCB's will have a built-in override mechanism. This is called the instantaneous override function, and will override the STD for medium to high level faults. This override may "kick in" for faults as low as 12 times (12x) the breaker's ampere rating. (See curve in left column on next page.) This can result in non-selective tripping of the breaker and load side breakers where overlaps occur. This can be seen in the example. (See curve in right column on next page.) As the overlap suggests, for any fault condition greater than 21,000 amperes, both devices will open, causing a blackout.

Low Voltage Power Circuit Breaker with Short-Time-Delay

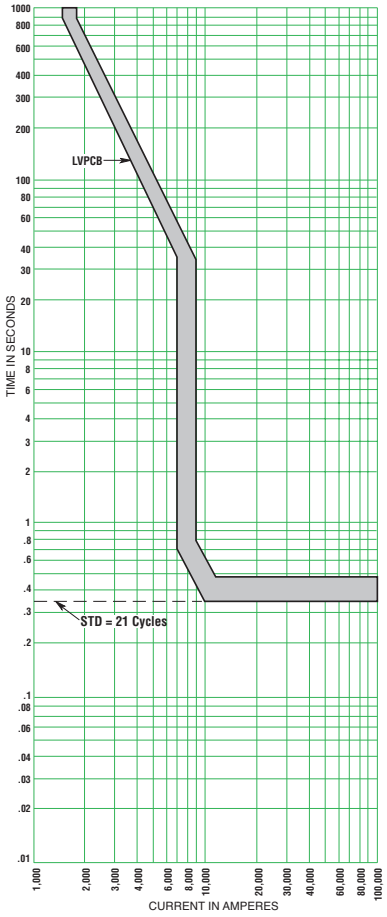

Caution: Use of Circuit Breaker Short-Time Delay Settings May Negate Protection and Increase Arc Flash Hazard

The longer an overcurrent is permitted to flow the greater the potential for component damage. The primary function of an overcurrent protective device is to provide protection to circuit components and equipment. A short-time delay (STD) setting on a circuit breaker can negate the function of protecting the circuit components. A low voltage power circuit breaker with a short-time delay and without instantaneous trip, permits a fault to flow for the length of time of the STD setting, which might be 6, 12, 18, 24 or 30 cycles. This typically is done to achieve fault coordination with downstream circuit breakers. However, there is an adverse consequence associated with using circuit breaker short-time delay settings. If a fault occurs on the circuit protected by a short time delay setting, a tremendous amount of damaging fault energy can be released while the system waits for the circuit breaker short-time delay to time out.

In addition, circuit breakers with short-time delay settings can drastically increase the arc flash hazard for a worker. The longer an overcurrent protective device takes to open, the greater the flash hazard due to arcing faults. Research has shown that the arc flash hazard can increase with the magnitude of the current and the time duration the current is permitted to flow. System designers and users should understand that using circuit breakers with short-time delay settings will greatly increase the arc flash energy if an arcing fault incident occurs. If an incident occurs when a worker is at or near the arc flash, the worker may be subjected to considerably more arc flash energy than if an instantaneous trip circuit breaker or better yet a current-limiting circuit breaker or current-limiting fuses were protecting the circuit. The requirements for doing flash hazard analysis for worker safety are found in NFPA 70E "Electrical Safety Requirements for Employee Workplaces".

As an example, compare the photos resulting from investigative testing of arcing faults. Further information is provided in "Electrical Safety & Arc Flash Protection" in this bulletin. A couple of comparison photos are shown on the next page. These tests and others are detailed in "Staged Tests Increase Awareness of Arc-Fault Hazards in Electrical Equipment", IEEE Petroleum and Chemical Industry Conference Record, September, 1997, pp. 313-322. This paper can be found on the Cooper Bussmann web site at www.bussmann.com/services/safetybasics. One finding of this IEEE paper is that current-limiting overcurrent protective devices reduce damage and arc-fault energy (provided the fault current is within the current-limiting range).

Insulated Case Circuit Breaker–Instantaneous Override

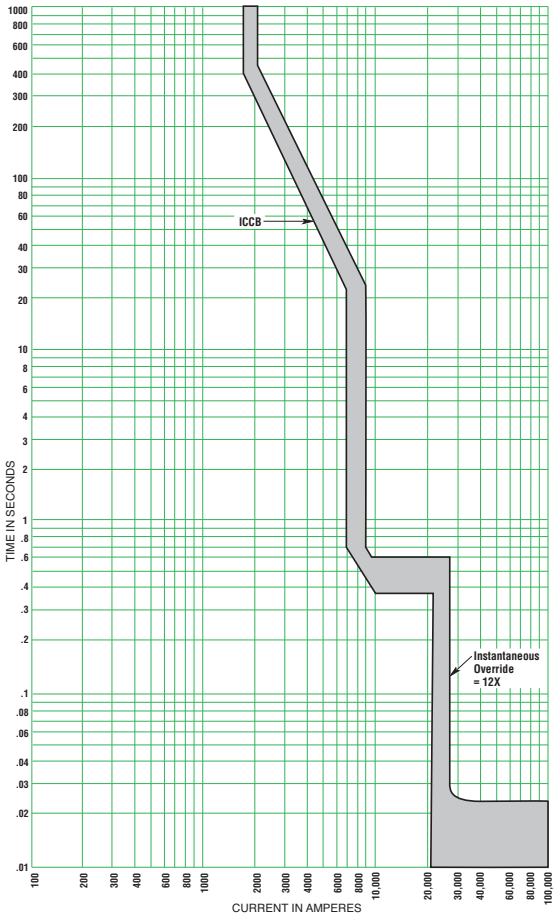

Instantaneous Override Opens at 21,000 Amps

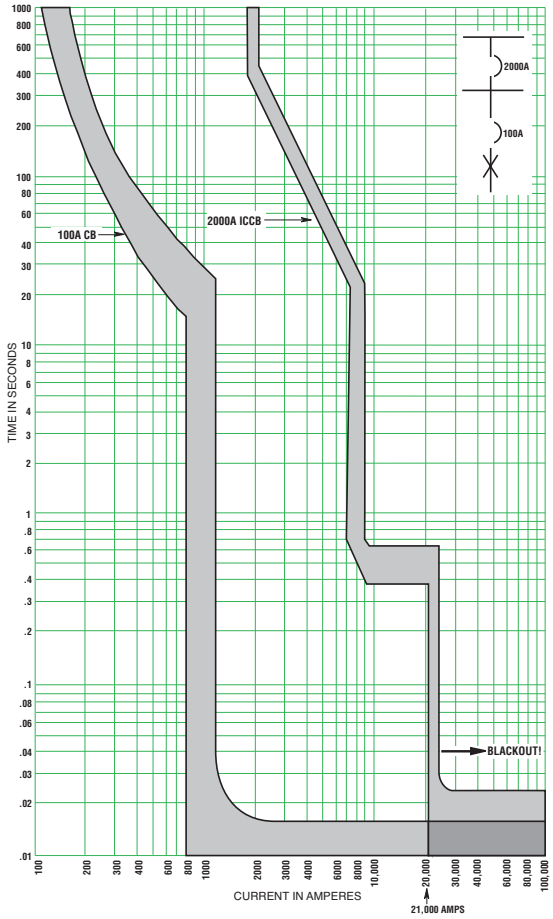

Caution: Use of Circuit Breaker Short-Time Delay Settings May Negate Protection and Increase Arc Flash Hazard

Test 4 shows sequential photos of a circuit protected by a circuit breaker with a short-time delay: interrupted at 6 cycles, so this incident lasted 1/10 of a second. The arcing fault was initiated on a three phase, 480V system with 22,600 amperes short-circuit available.

Current-limiting fuses or current-limiting circuit breakers can reduce the risks associated with arc flash hazards by limiting the magnitude of the fault currents (provided the fault current is within the current-limiting range) and reducing the time duration of the fault. Test 3 photos, to the right, are from tests with the same test setup as shown in Test 4 above, except that KRP-C-601SP LOW-PEAK® current-limiting fuses protect the circuit and clear the arcing fault in less than 1/2 cycle. The arc flash was greatly reduced because these fuses were in their current-limiting range. Also, the thermal and mechanical stresses on the circuit components that conducted the fault current were greatly reduced. Recent arc flash research has shown that arc flash energy is linearly proportional to the time duration of the fault (given the fault currents are the same). Ignoring the fact that the KRP-C-601SP LOW-PEAK® Fuses in Test 3 limited the current let-through, the arc flash energy released in Test 3 was approximately 1/12 that of Test 4 just due to the faster operation of the KRP-C-601SP LOW-PEAK® Fuses (less than 1/2 cycle clearing in Test 3 vs. 6 cycles clearing in Test 4). The actual arc flash energy was reduced even more in Test 3 because of the current-limiting effect of the KRP-C-601SP LOW-PEAK® Fuses.

Test 3 – Same test circuit as the prior photos, to the left, except the circuit is protected by KRP-C-601SP LOW-PEAK® Current-Limiting Fuses. In this case these fuses limited the current and the fuses cleared in less than a 1/2 cycle.