EV CONTROL SYSTEM

■ DESCRIPTION

The EV ECU processes the calculations for the various types of system controls and motor torque command based on the input signals received from the sensors and switches. In addition, the EV ECU is equipped with a diagnostic function and a fail-safe function.

■ LAYOUT OF COMPONENTS

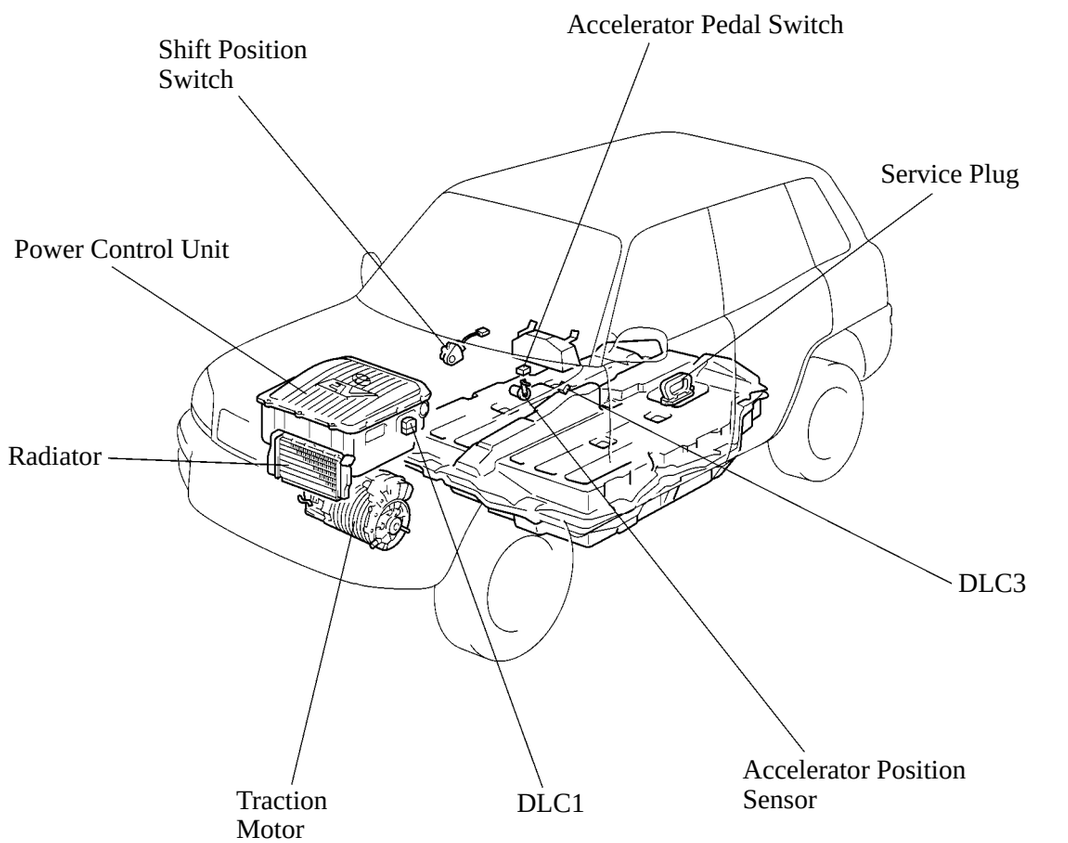

153EG17

■CONSTRUCTION AND OPERATION

1. Accelerator Position Sensor

- The accelerator position sensor uses a Hall element that outputs voltage that changes linearly in relation to the amount of pedal effort that is applied to the accelerator pedal.
- The accelerator position sensor uses a duplex system to ensure its reliability.

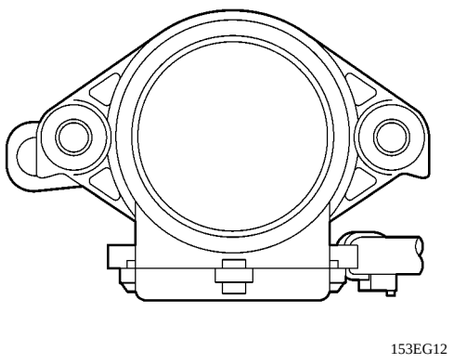

Exterior View of Accelerator Position Sensor

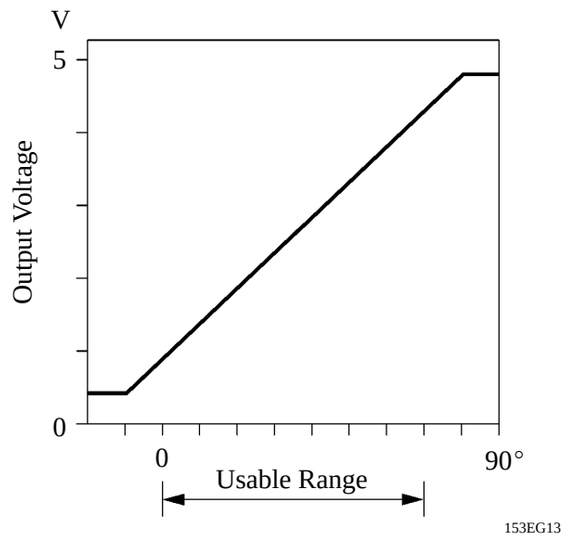

Accelerator Pedal Depressed Angle

2. Accelerator Pedal Switch

Detects the full-close condition of the accelerator pedal.

3. Revolution Sensor

The revolution sensor detects the rotational angle and the rotational direction of the rotor of the traction motor.

4. Motor Temp. Sensor

The motor temperature sensor uses a thermister to detect the temperature of the traction motor.

5. System Main Relay

A high-voltage circuit breaker relay is provided at both poles of the traction batteries to ensure safety against electrical shock.

6. EV ECU

System Main Relay Control

Activates the system main relay control to supply electrical power from the traction batteries only when needed during driving (READY ON), and during charging.

Traction Motor Control

Calculates the traction performance in accordance with the driver's desired driving condition in order to realize, via vector control, a finely tuned and highly efficient motor control.

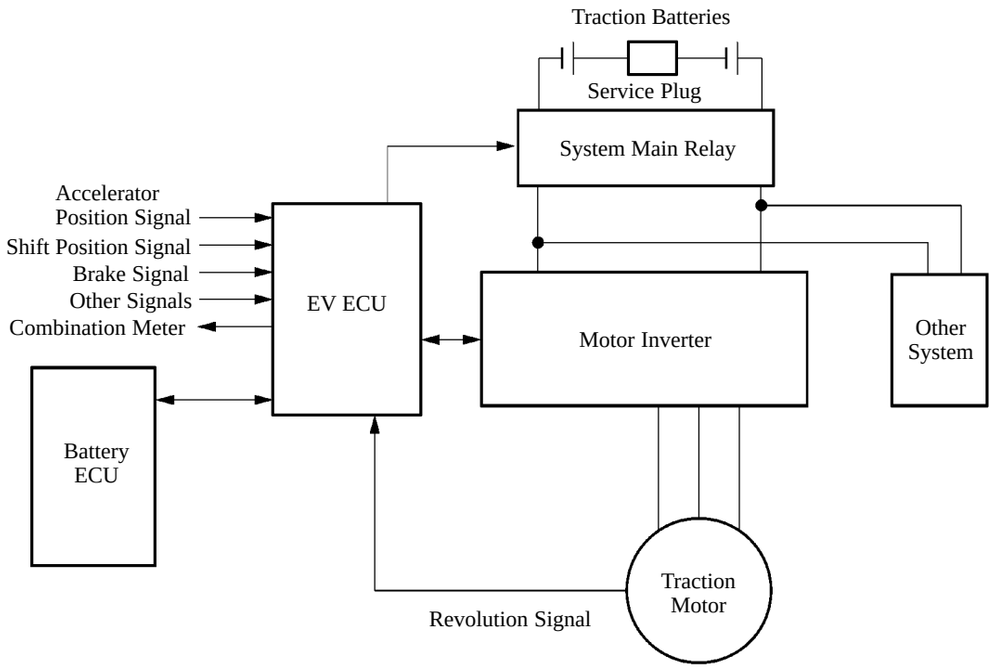

153EG14

Output Reduction Control

To prevent overheating, an output reduction control is implemented in case of an abnormal condition of the traction motor, motor inverter, or traction batteries. At the same time, the indicator light in the combination meter is illuminated.

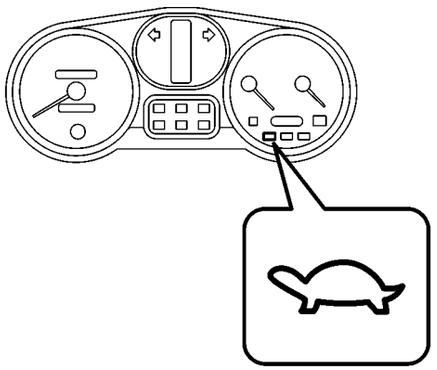

153EG09

Indicator Light

Snow Mode Control (Cold Area Specification Model Only)

When the snow mode switch is turned ON, the traction motor outputs less traction force than normal in order to facilitate the vehicle's startoff on slippery surface such as snow-covered roads.

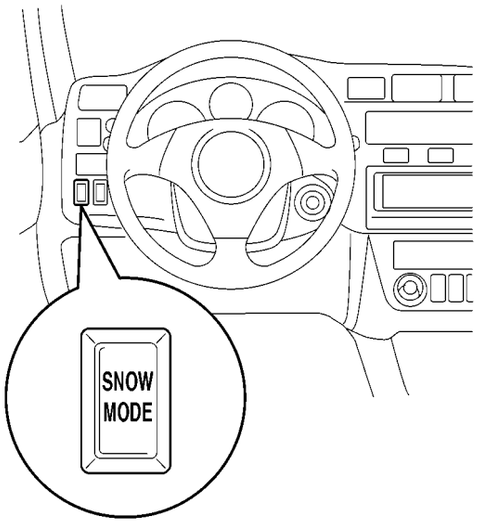

153EG16

Snow Mode Switch

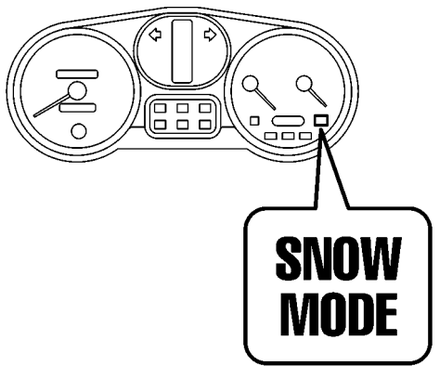

153EG11

Indicator Light

Diagnosis System

- In case a malfunction occurs in the driving system or battery control system, the EV ECU illuminates the malfunction indicator lamp (MIL) in the combination meter to alert the driver. The results of the diagnosis are stored in the EV ECU, and the diagnostic trouble code can be displayed on the MIL by shorting together the terminals TC and E1 of DLC1.
- A diagnostic trouble code can also be output via DLC3 to an OBD-II scan tool or a hand-held tester.

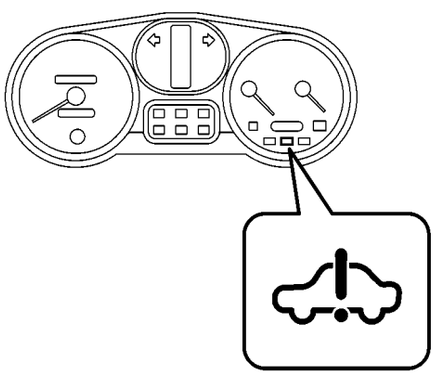

153EG10

Malfanction Indicator Lamp