ACCESSORIES

■ DESCRIPTION

The RAV4 EV includes the accessory systems shown in the below.

System	Outline
Power Window	This system includes one-touch auto up and down, key-off operation and jam protection functions. The one-touch auto up and down function automatically fully closes and opens the driver's side window. The key-off operation function makes it possible to operate the power windows for approximately 45 seconds after the motor switch is turned to the ACC or LOCK position, if the front doors are not opened. A jam protection function automatically stops the power window and moves it downward, if a foreign object becomes jammed in the window during one-touch auto-up operation of the driver's window.
Door Lock Control	This system has a "key linked lock and unlock function". Lock and unlock are linked with the door key cylinder operation. When the driver's door key cylinder is operated, it is necessary to turn the key 2 times in succession in order to unlock the passenger's door.
SRS Airbag	The SRS (Supplemental Restraint System) airbag is provided for the driver and front passenger. SRS airbag has been designed to lessen the shock to the head and chest of the driver and front passenger in a frontal impact in the event of a collision. 3-sensor type airbag system is used in which the detection of deceleration during a collision as well as control of the airbag system is accomplished by the front airbag sensor and airbag sensor assembly.
Seat Heater	The seat heater system improves the comfort of the driver, the front passenger and the rear passenger (option) in a cold weather by heating the surface of the seats.
Electrical Remote Control Mirror	An electrical remote control type outside rear view mirror that enables mirror angle to be adjusted by a switch operation is provided.
Key Reminder System	When the driver's door is opened with the motor switch in the ACC or LOCK position, this system sounds a buzzer to warn the driver that the motor switch has not been removed.

■SRS AIRBAG

1. General

- The SRS (Supplemental Restraint System) airbag is designed to help lessen the shock to the driver and front passenger as a supplement to the seat belt.
  In a collision, the airbag sensor detects the shock and if the front-to-rear shock is greater than a specified value, the airbags stored in the steering wheel pad for the driver and above the glove box for the front passenger inflate instantly to help reduce the likelihood of the driver's or front passenger's head and chest directly hitting the steering wheel or instrument panel.
- The 3-sensor type airbag system is used, in which the detection of deceleration during a collision is accomplished by the airbag sensor enclosed in the airbag sensor assembly and front airbag sensors.
- The airbag system is controlled by the airbag sensor assembly. It has a self-diagnosis function. When it detects a system malfunction, it lights up the SRS warning light on the combination meter to alert the driver.

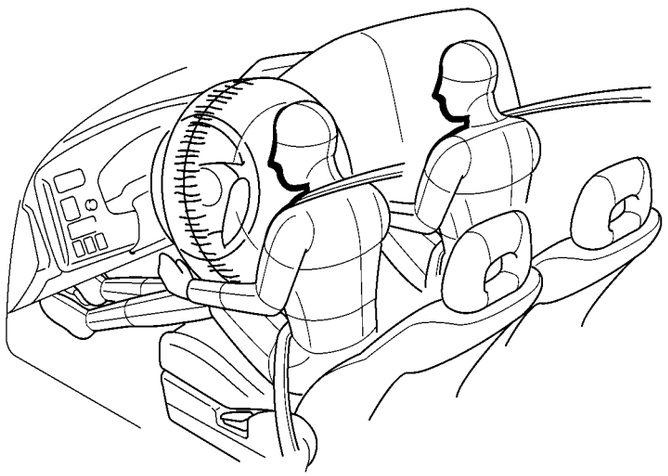

153BE21

▶ System Diagram ◀

The activation processes of the SRS airbag is as illustrated below.

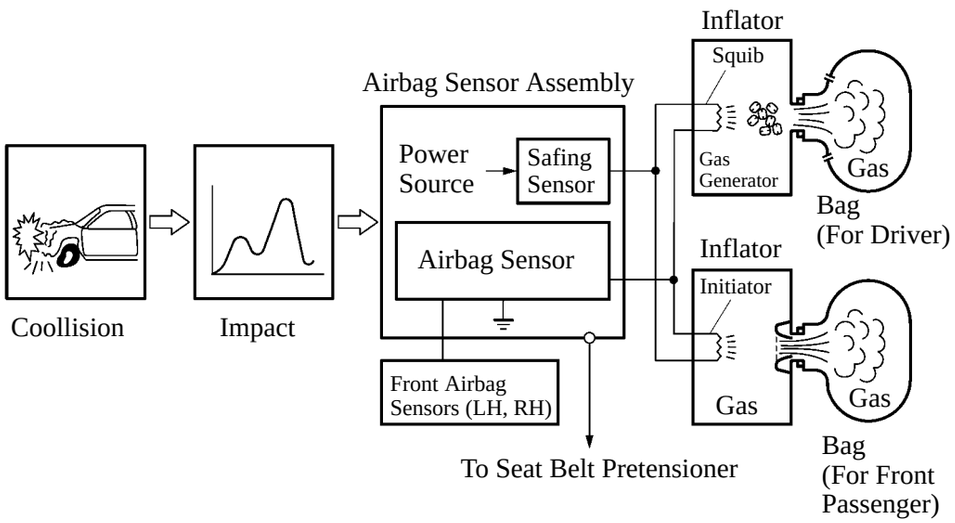

153BE22

2. Layout of Components

The major function parts of the airbag system are shown below.

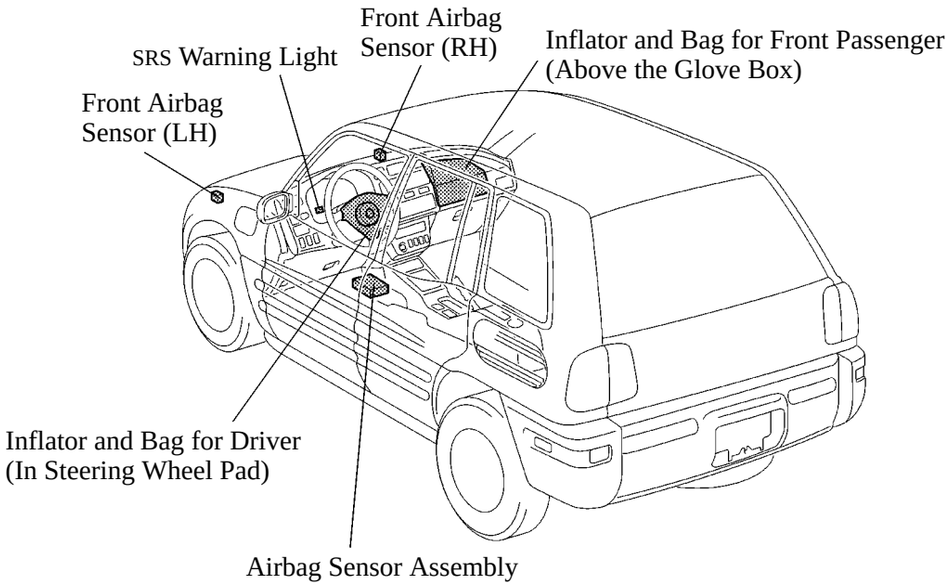

153BE23

3. Wiring Diagram

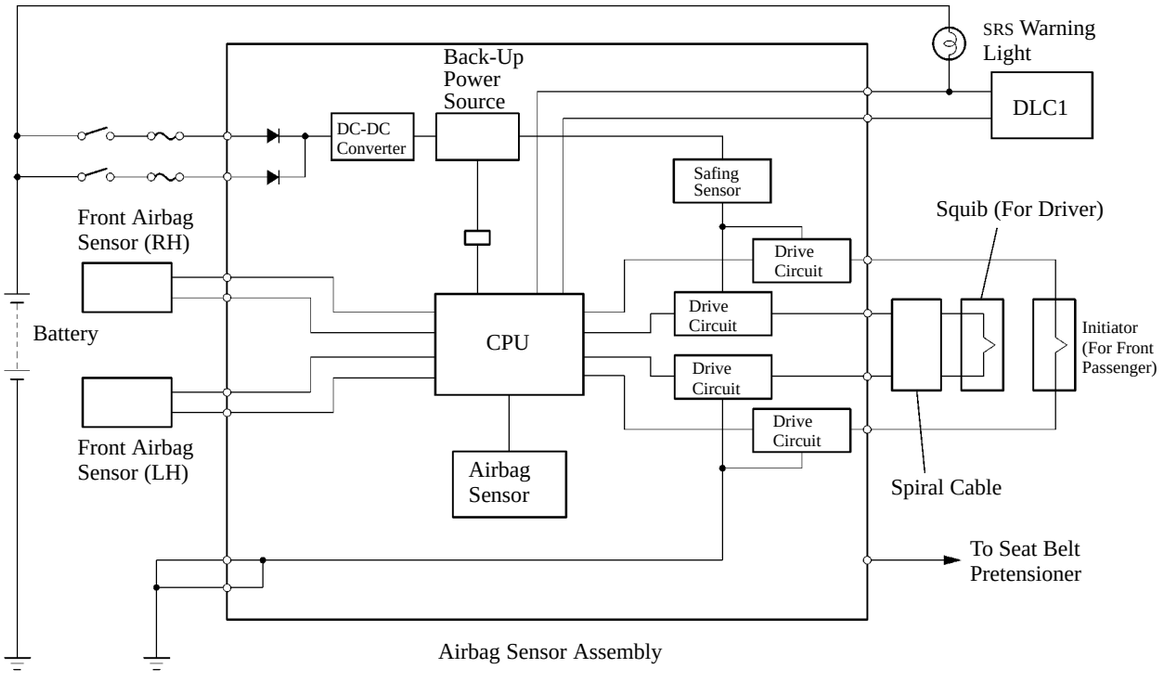

153BE24

4. Construction and Operation

Front Airbag Sensor

The front airbag sensor consists of rotor, movable contact point and a stationary contact point.
The rotor is fixed by the initial set load of the movable contact point. At the same time, the movable contact point restrains the movement of the rotor which is generated during vehicle deceleration, thus preventing the unintended activation of the system.
If a sudden deceleration that exceeds a predetermined value occurs due to a collision of the vehicle, the rotor will rotate. The rotational movement of the rotor pushes the movable contact point and causes the movable and stationary contact points to come into contact. As a result, an ON signal is generated and transmitted to the airbag sensor assembly.

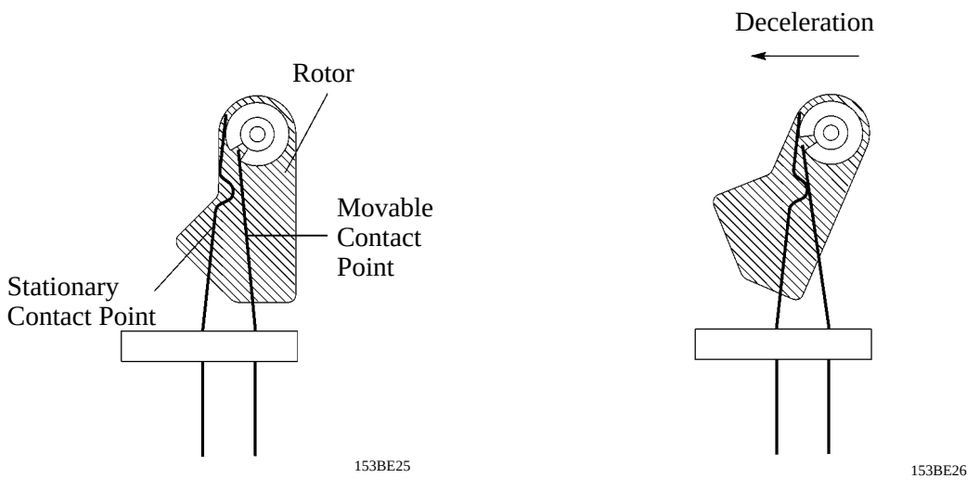

Normal Condition **Activated Condition**

Airbag Sensor Assembly

1) Description

The airbag sensor assembly is mounted on the center floor under the instrument panel. It receives signals from the airbag sensor enclosed in the airbag sensor assembly and front airbag sensor and judges whether the airbag and seat belt pretensioner must be activated or not, and then diagnoses system malfunctions.

2) Construction and Operation

The airbag sensor assembly consists of airbag sensor, safing sensor, ignition control circuit, diagnosis circuit, etc.

a. Airbag Sensor, Ignition Control Circuit

- The airbag sensor is enclosed in the airbag sensor assembly. Based on the deceleration of the vehicle that occurs during a collision, the distortion that is created in the sensor is converted into an electric signal. This signal is a linear representation of the deceleration rate.
- The ignition control circuit performs a prescribed calculation based on the signal output by the airbag sensor and the front airbag sensor. If these calculated values are larger than a predetermined value, it activates the ignition operation.

b. Safing Sensor

The safing sensor is enclosed in the airbag sensor assembly. The sensor turns ON and outputs an ON signal to the airbag sensor assembly if a deceleration force that is higher than a predetermined value is applied to the safing sensor as a result of a frontal collision.

c. Back-Up Power Source

The back-up power source consists of a power supply capacitor and a DC-DC converter. In case of a power system failure during a collision, the power supply capacitor discharges and supplies electric power to the system. The DC-DC converter is a boosting transformer when the battery voltage drops below a certain level.

d. Diagnosis Circuit

This circuit constantly diagnoses the system for any malfunction. When a malfunction is detected, it lights up the SRS warning light on the combination meter to alert the driver.

e. Memory Circuit

When a malfunction is detected by the diagnosis circuit, it is coded and stored in this memory circuit. However, if the power supply is cut off by turning the ignition switch OFF or by disconnecting the battery terminal, the diagnosis code will be deleted from the memory circuit.

Inflator and Bag

1) For Driver

a. Construction

The inflator and bag are stored in the steering wheel pad and cannot be disassembled. The inflator contains a squib, gas generator, etc., and inflates the bag in case of collision. The bag is made of strong nylon cloth.

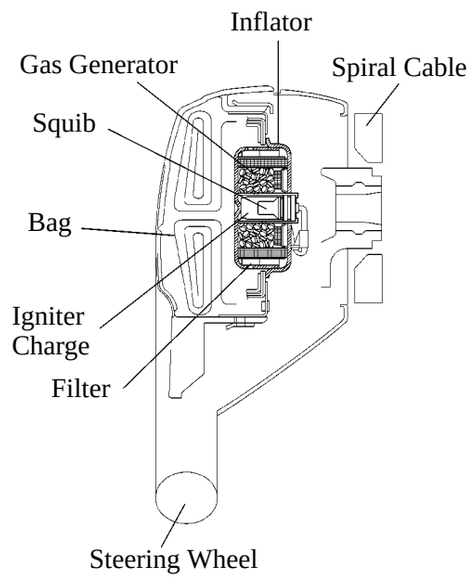

153BE39

b. Operation

It the airbag sensor is activated by deceleration due to frontal collision, electric current then ignites the squib located in the inflator. The flame spreads instantaneously to the gas generator, and a large amount of nitrogen gas is generated from the gas generator. The gas flows through the filter where cinders are removed and the gas is cooled before filling the bag. Then, as it expands, the driver's bag tears open the wheel pad outer layer to expand further and to help to restrain the impact applied to the head and chest of the driver.

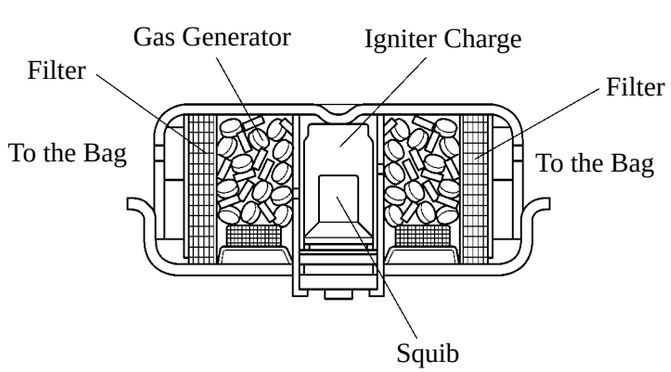

153BE27

2) For Front Passenger

a. Construction

The inflator and bag for front passenger are inserted inside the case and located in the passenger side instrument panel. The bag is made of strong nylon cloth and becomes inflated by the argon gas flowed from the inflator.
The inflator of Morton made is comprised of a initiator, projectile, orifice disk, propellant grain, high pressure argon gas and etc.

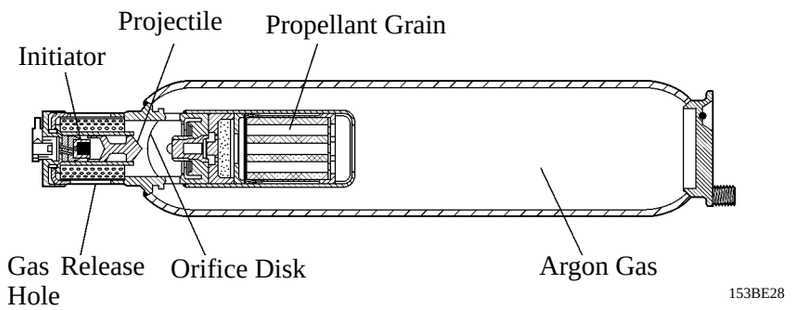

b. Operation

If the airbag sensor is turned on by deceleration due to frontal collision, electric current then ignites the initiator located in the inflator. The projectile which fired by the ignition of the initiator pierces through the orifice disk and collides with the action piston which causes the primer to ignite. The flame of the primer spreads instantaneously to the ignition booster and to the propellant grain. The gas which expanded by the heat of the ignition of the propellant grain flows into the airbag via the gas release hole, thus inflating the airbag.

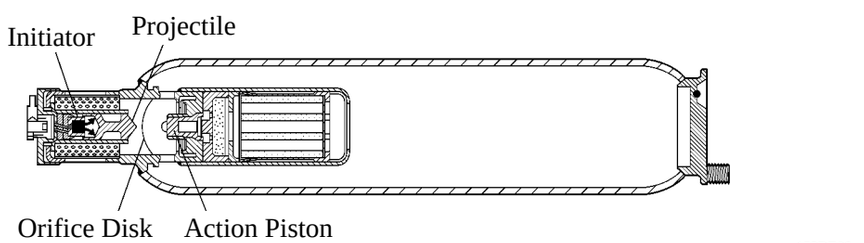

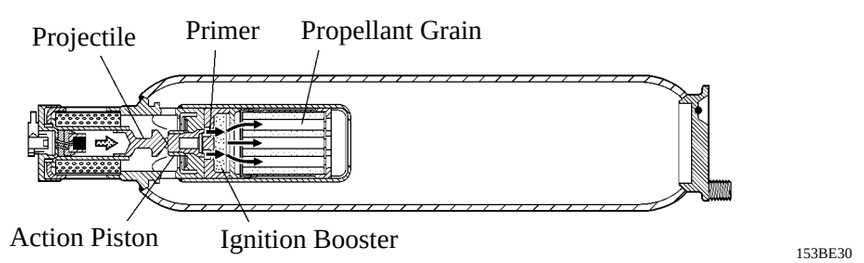

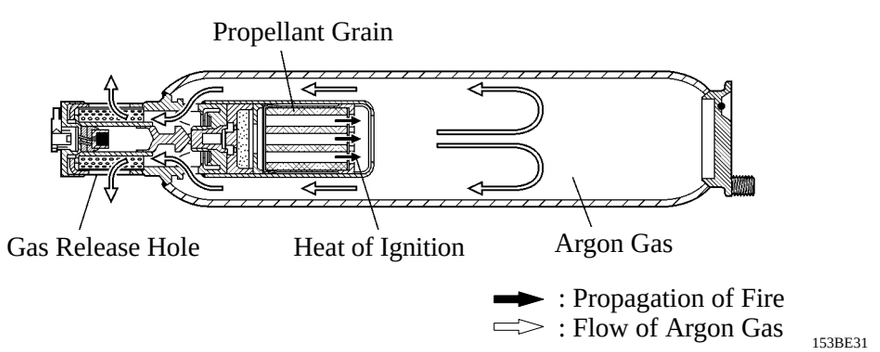

SRS Warning Light

The SRS warning light is located on the combination meter.
It comes on to alert the driver about the system trouble when a malfunction is detected in self-diagnosis of the airbag sensor assembly and side airbag sensor assembly. In normal operating conditions when the motor switch is turned to the ACC or ON position, the light comes on for about 6 seconds and then goes off.

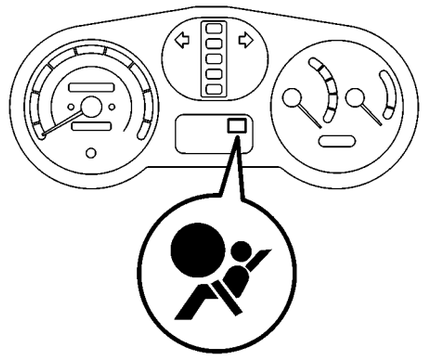

SRS Warning Light

153BE32

5. System Operation

Ignition Judgement and Conditions

- When the vehicle collides in the hatched area (Fig. 1) and the shock is larger than a predetermined level, the airbag and the seat belt pretensioner are activated automatically. The airbag sensor is characteristically turned in such a way that can judge the need for ignition in collisions within the hatched area.
- The safing sensor is designed to be activated by a smaller deceleration rate than that of the airbag sensor. As illustrated in Fig. 2 below, ignition is operated when current flows to the squib. This happens when a safing sensor and the airbag sensor go on simultaneously.
- Airbag sensor assembly judges whether or not to inflate the airbag in accordance with ON/OFF of the front airbag sensor and the deceleration detected by the airbag sensor.

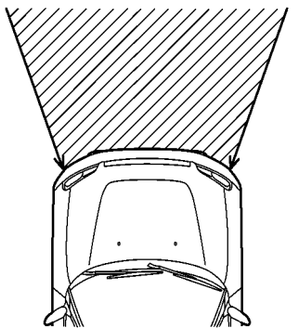

153BE33

Fig. 1

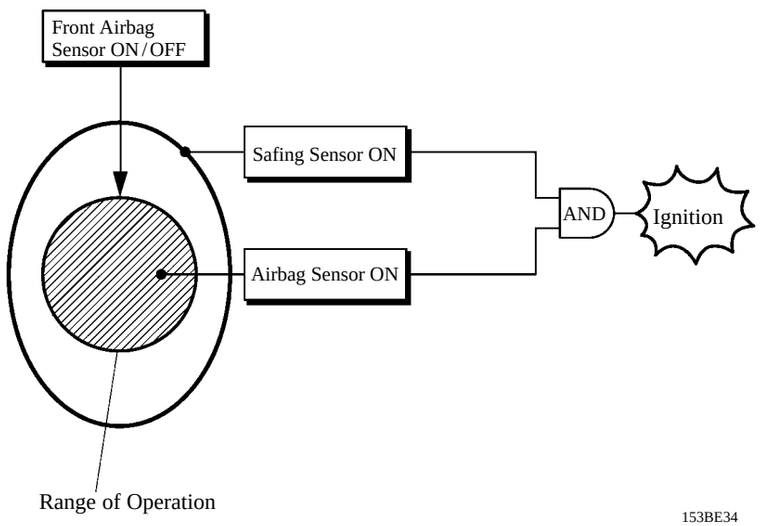

153BE34

Fig. 2